602498-043-SH1

MACHINED RADIUS

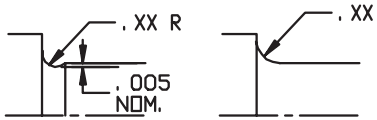

PART AS TURNED — PART AS GROUND

MAX. SURFACE FINISH ON RADIUS 63 MICRO -RADIUS TO BLEND INTO SHAFT IF NO RADIUS IS SPECIFIED SEE NOTE.

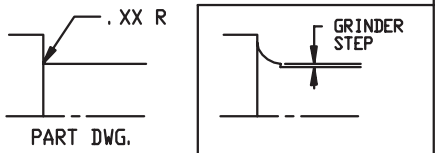

NOTE: UNSPECIFIED RADIUS IS NOMINAL TOOL NOSE RADIUS WITH POSSIBLE .010 MAXIMUM GRINDER STEP.

KEYWAY TOLERANCES

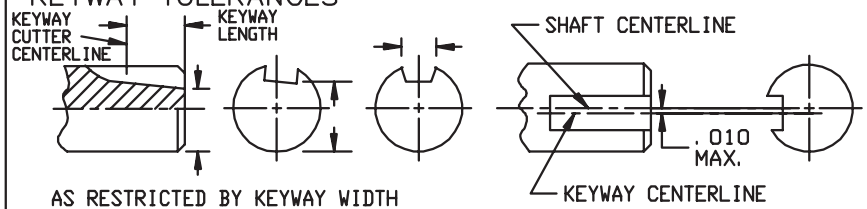

AS RESTRICTED BY KEYWAY WIDTH AND DEPTH TOLERANCE

KEYWAY LENGTH		LEAD
OVER	TO (INCL.)	(MAXIMUM)
	4	.002
4	10	.0005 PER INCH
10		.005

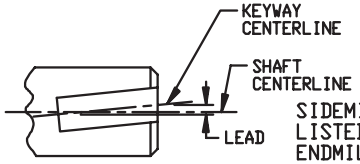

SIDEMILL KEYWAY LENGTH TOLERANCE +.06/-.00
LISTED KEYSEAT RUNOUT RADIUS IS MAXIMUM.
ENDMILL KEYWAY LENGTH PER PRINT DIMENSIONS.
KEYSEAT LENGTH MUST BE MET.

FINISH ON BOTTOM AND SIDES OF KEYWAY 250 MAX.
ALL EDGE BREAKS NOT TO EXCEED .010

CENTERS

MAY BE OMITTED UNLESS OTHERWISE SPECIFIED.

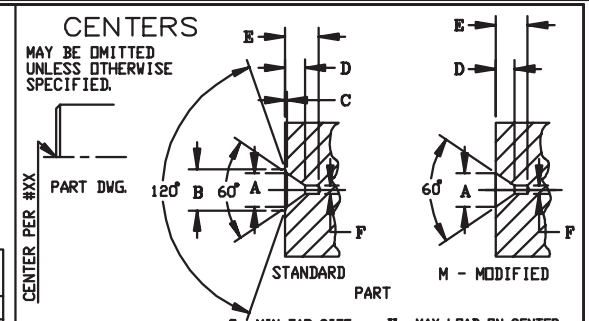

G - MIN. TAP SIZE H - MAX LOAD ON CENTER

CENTER	A	B	C	D	E REF-NEV-	F	G	H
#12	.150	.188	.011	.087	.149	.062	6-32	80
#13	.200	.250	.014	.106	.200	.094	8-32	135
#14	.250	.312	.018	.140	.250	.109	10-32	220
#15	.350	.438	.025	.193	.349	.156	1/4-20	425
#12M	.150	—	—	.076	.138	.062	6-32	—
#13M	.200	—	—	.092	.186	.094	8-32	—
#14M	.250	—	—	.109	.219	.109	10-32	—

BEARING RELIEF

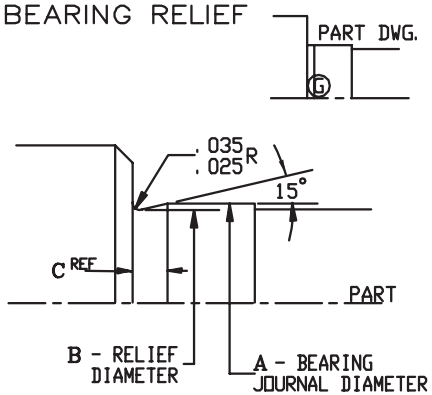

MAX. SURFACE FINISH ON UNDERCUT 40

BRG SIZE	A	B	C
02	.5908/.5904	.574/.564	.070
03	.6695/.6691	.653/.648	.070
04	.7877/.7873	.771/.761	.077
05	.9846/.9842	.958/.968	.077
06	1.1814/1.1810	1.165/1.155	.076
07	1.3784/1.3780	1.362/1.352	.076

BEARING SHOULDER

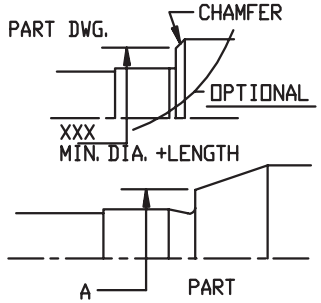

NOTE: 03 BRG WITH .75 OR LESS BODY DIA REQUIRES .010/.025 x 15° CHAMFER.

SEE NOTE

BRG SIZE	A
202	.710/.690
203	.807/.787
204	.989/.969
205	1.192/1.172
206	1.426/1.406
207	1.634/1.614
104	.910/.890
105	1.140/1.120
306	1.426/1.406

FINISHES AND RUNOUTS

7) #14 CENTERS OR SMALLER TO BE USED UNLESS OTHERWISE SPECIFIED.

8) THESE TOLERANCES APPLY UNLESS OTHERWISE SPECIFIED
TWO PLACE DECIMAL ±.01
THREE PLACE DECIMAL ±.003

GENERAL NOTES

1) BEARING JOURNALS 'B' TO BE ROUND WITHIN .00024 T.I.R.
2) ALL OTHER DIAMETERS FINISHED TO WITHIN .001 TOLERANCE OR LESS TO BE ROUND, STRAIGHT, AND CONCENTRIC TO BEARING JOURNALS 'B' WITHIN .001 T.I.R. FOR SHAFTS WITHOUT SCORES ON THE BODY DIAMETER, OR WITHIN .0015 T.I.R. FOR SHAFTS WITH SCORES ON THE BODY DIAMETER.
3) ALL CORNERS, UNLESS OTHERWISE SPECIFIED, TO BE BROKEN APPROXIMATELY .005 x 45°.
4) ALL DIAMETERS TO BE HELD WITHIN PRINT DIMENSIONS.
5) ALL ANGLES DIMENSIONED FROM SHAFT LENGTH CENTERLINE WITH A TOLERANCE OF PLUS OR MINUS ONE DEGREE.
6) OVERALL LENGTH DIMENSION IS NOMINAL CUTOFF LENGTH. GIVEN TOLERANCE IS FOR PROCESSING INFO ONLY.

ALL SHAFTS COATED PER G.F.I. 318.40 (FERROCOTE NO. 364) EXCEPT STAINLESS STEEL

ITEM	DESCRIPTION		
A	FINISH ON FLAT	(MICRO-INCHES MAX.)	125
B	FINISH ON BEARING JOURNALS	(MICRO-INCHES MAX.)	63
C	FINISH ON COMMUTATOR DIAMETER	(MICRO-INCHES MAX.)	125
D	FINISH ON ARMATURE OR ROTOR DIAMETER	(MICRO-INCHES MAX.)	63
E	FINISH ON ALL OTHER DIAMETERS	(MICRO-INCHES MAX.)	125
F	FINISH ON SHAFT EXTENSION	(MICRO-INCHES MAX.)	63
G	SQUARENESS OF BEARING SHOULDER	(T.I.R.)	.0020
H	RUNOUT OF 5.00 INCH FROM BRG SHOULDER EXTENSION	(T.I.R.)	.0012
J	RUNOUT FOR EACH ADDITIONAL INCH	(T.I.R.)	.0002

NOTE: ALL MICROFINISHES TO BE MEASURED WITH THE A,R PILOTOR SCALE SET AT .030 AND THE RANGE SET AT 100 ON THE SHEFFIELD PROFOLOMITOR OR EQUIVALENT.

REV. DESC: LOAD TO BUS		
REV. LTR: —	VERSION: 00	TDR: 000000845116
FILE: \RGG\00023\147	REVISED: 12:45:33 03/20/2014	BY: RGGWT
MTL: —		

BALDOR

SHAFT STANDARDS — RMM

SH 1 of 1

602498-043-SH1

602498-043-SH2

SHAFT THREADS

THREAD SIZE	CLASS	MAJOR DIA.	MAJOR DIA. TOL. +/-	UN'CT DIA. +0/-.0050	UN'CT WIDTH	CHAMFER X 30 DEG.	MIN. SEC. LENGTH	PITCH DIAMETER	MINOR DIAMETER
5/16-24	2A	.3114	0/.0072	.2518	.09	.08	.38	.2843/.2806	.2618
	3A	.3125						.2854/.2827	.2629
3/8-16	2A	.3737	0/.0097	.2892	.09	.12	.52	.3331/.3287	.2992
	3A	.3750						.3344/.3311	.3005
3/8-24	2A	.3739	0/.0072	.3143	.09	.08	.38	.3468/.3430	.3243
	3A	.3750						.3479/.3450	.3254
7/16-20	2A	.4362	0/.0081	.3667	.09	.10	.44	.4037/.3995	.3767
	3A	.4375						.4050/.4019	.3780
1/2-13	2A	.4985	0/.0109	.3969	.09	.15	.62	.4485/.4435	.4069
	3A	.5000						.4500/.4463	.4084
1/2-20	2A	.4987	0/.0081	.4305	.09	.10	.44	.4662/.4619	.4392
	3A	.5000						.4675/.4643	.4405
9/16-18	2A	.5611	0/.0087	.4850	.09	.11	.48	.5250/.5205	.4950
	3A	.5625						.5264/.5230	.4964
5/8-11	2A	.6234	0/.0121	.5052	.09	.18	.72	.5644/.5589	.5152
	3A	.6250						.5660/.5619	.5168
5/8-18	2A	.6236	0/.0087	.5475	.09	.11	.48	.5875/.5828	.5575
	3A	.6250						.5889/.5854	.5589
11/16-20	2A	.6862	0/.0081	.618	.09	.10	.44	.6537/.6494	.6267
	3A	.6875						.6550/.6518	.6280
3/4-10	2A	.7482	0/.0129	.6191	.09	.20	.79	.6832/.6773	.6291
	3A	.7500						.6850/.6806	.6309
3/4-16	2A	.7485	0/.0094	.6640	.09	.12	.52	.7079/.7029	.6740
	3A	.7500						.7094/.7056	.6755
7/8-14	2A	.8734	0/.0103	.7784	.09	.14	.59	.8270/.8216	.7884
	3A	.8750						.8286/.8245	.7900
1-12	2A	.9982	0/.0114	.8890	.09	.17	.68	.9441/.9382	.8990
	3A	1.0000						.9459/.9415	.9008

BEARING LOCKNUT THREADS

THREAD SIZE	CLASS	MAJOR DIA.	MAJOR DIA. TOL. +/-	UN'CT DIA. +0/-.0050	UN'CT WIDTH	CHAMFER X 30 DEG.	MIN. SEC. LENGTH	PITCH DIAMETER	MINOR DIAMETER
.391-32	3A	.3910	0/.0054	.3427	.09	.03	.28	.3707/.3681	.3527
.469-32	3A	.4690	0/.0054	.425	.09	.03	.28	.4487/.4461	.4307
.586-32	3A	.5860	0/.0054	.538	.09	.03	.28	.5657/.5627	.5477
.664-32	3A	.6640	0/.0054	.616	.09	.03	.28	.6437/.6407	.6257
.781-32	3A	.7810	0/.0054	.735	.09	.03	.28	.7607/.7573	.7427
.969-32	3A	.9690	0/.0054	.921	.09	.03	.28	.9487/.9453	.9307
1.173-18	3A	1.1730	0/.0054	1.096	.09	.03	.43	1.1369/1.1329	1.1048

THREAD NOTES

STANDARD THREAD CLASS IS 2B FOR INTERNAL AND 2A FOR EXTERNAL THREADS UNLESS OTHERWISE NOTED

THREADS ARE ALL RIGHT HAND UNLESS OTHERWISE NOTED

TAP DRILL HOLES SHOULD BE .25" DEEPER THAN MIN. TAP DEPTH FOR #10 SIZE THREADS AND SMALLER AND .38" DEEPER FOR #12 SIZE THREADS AND LARGER UNLESS OTHERWISE NOTED

REV. DESC: LOAD TO BUS		
REV. LTR: –	VERSION: 00	TDR: 000000845116
FILE: \RGG\00023\148	REVISED: 12:48:27 03/20/2014	BY: RGGWT
MTL: –		

BALDOR

SHAFT STANDARDS – RMM

SH 1 of 1

602498-043-SH2

602498-043-SH3

SHAFT KEY AND KEYSEAT DIMENSIONS

W = KEY WIDTH
S = KEYWAY WIDTH
H = KEY HEIGHT
U = SHAFT DIAMETER

$$R(\text{KEYWAY HEIGHT}) = \frac{(U-H) + \sqrt{U^2 - S^2}}{2}$$

FOR METRIC KEY HEIGHT SEE 'IEC' STD. 72-1

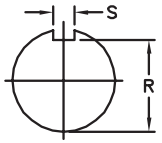

THESE DIMENSIONS TO APPEAR ON SHAFT DRAWING

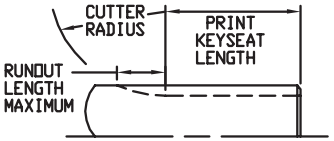

SHAFT DIA U	S	W	H	R	RUNOUT LENGTH MAXIMUM	CUTTER RADIUS
.3750	.096/.094	.094/.093	.094/.093	.322/.312	.498	2.00 INCH
.4375	.127/.125	.123/.125	.123/.125	.370/.355	.447	1.25 INCH
.5000	.127/.125	.123/.125	.123/.125	.429/.414	.456	1.25 INCH
.5000	.190/.188	.186/.188	.186/.188	.392/.377	.480	1.00 INCH
.5625	.190/.188	.186/.188	.186/.188	.454/.439	.481	1.00 INCH
.6250	.127/.125	.123/.125	.123/.125	.556/.546	.437	1.25 INCH
.6250	.190/.188	.186/.188	.123/.125	.548/.533	.419	1.00 INCH
.6250	.190/.188	.186/.188	.186/.188	.517/.502	.480	1.00 INCH
.6875	.190/.188	.186/.188	.186/.188	.580/.565	.480	1.00 INCH
.7500	.190/.188	.186/.188	.123/.125	.675/.660	.415	1.00 INCH
.7500	.190/.188	.186/.188	.186/.188	.644/.629	.477	1.00 INCH
.8750	.190/.188	.186/.188	.186/.188	.771/.756	.473	1.00 INCH
.9375	.190/.188	.186/.188	.186/.188	.834/.819	.472	1.00 INCH
.9375	.252/.250	.248/.250	.248/.250	.796/.781	.667	1.50 INCH
1.0000	.252/.250	.248/.250	.248/.250	.859/.844	.666	1.50 INCH
1.1250	.252/.250	.248/.250	.248/.250	.986/.971	.662	1.50 INCH
1.2500	.252/.250	.248/.250	.248/.250	1.112/1.097	.660	1.50 INCH
1.3750	.314/.312	.376/.375	.376/.375	1.201/1.186	.729	1.50 INCH
28mm	.315/.313	.315/.314	.276/.274	.945/.938	METRIC KEYSEATS ARE ENDMILLED ONLY	
24mm	.315/.313	.315/.314	.276/.274	.787/.780	METRIC KEYSEATS ARE ENDMILLED ONLY	
19mm	.236/.234	.236/.235	.236/.235	.610/.606	METRIC KEYSEATS ARE ENDMILLED ONLY	
14mm	.197/.195	.197/.196	.197/.196	.433/.429	METRIC KEYSEATS ARE ENDMILLED ONLY	

REV. DESC: LOAD TO BUS		
REV. LTR: –	VERSION: 00	TDR: 000000845116
FILE: \RGG\00023\149	REVISED: 12:50:00 03/20/2014	BY: RGGWT
MTL: –		

BALDOR

SHAFT STANDARDS – RMM

SH 1 of 1

602498-043-SH3

602498-043-SH4

PRESS-ON FAN SHAFT KNURL

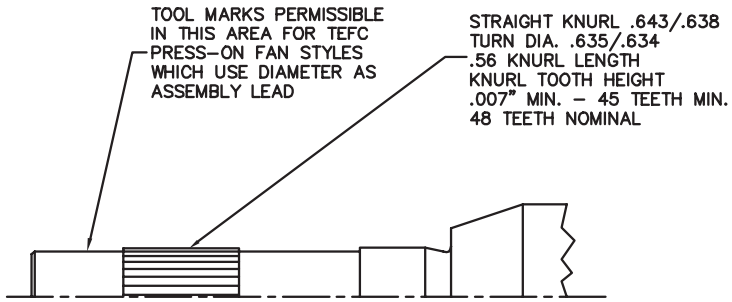

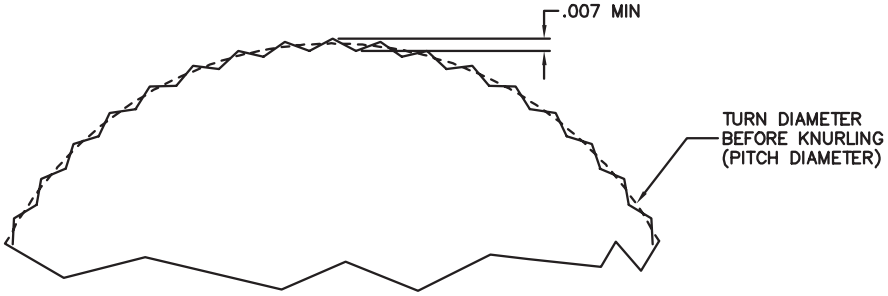

SHAFT SECTION SHOWN
10X SCALE

NOTE: ALL MICROFINISHES TO BE MEASURED WITH THE A,R PILOTOR SCALE SET AT .030 AND THE RANGE SET AT 100 ON THE SHEFFIELD PROFOLOMITOR OR EQUIVALENT.

REV. DESC: LOAD TO BUS		
REV. LTR: -	VERSION: 00	TDR: 000000845116
FILE: \RGG\00023\150	REVISED: 12:51:38 03/20/2014	BY: RGGWT
MTL: -		

BALDOR

SHAFT STANDARDS - RMM

SH 1 of 1

602498-043-SH4